US009485551B2

(12) **United States Patent**
Prakash et al.

(10) **Patent No.: US 9,485,551 B2**
(45) **Date of Patent: Nov. 1, 2016**

(54) **ENHANCED ROUTING AND WAVELENGTH ASSIGNMENT TECHNIQUES FOR REDUCING WAVELENGTH CONTINUITY BLOCKING**

(71) Applicant: **Ciena Corporation**, Hanover, MD (US)

(72) Inventors: **Anurag Prakash**, Noida (IN); **Mohit Chhillar**, Delhi (IN)

(73) Assignee: **Ciena Corporation**, Hanover, MD (US)

(*) Notice: Subject to any disclaimer, the term of this patent is extended or adjusted under 35 U.S.C. 154(b) by 202 days.

(21) Appl. No.: **14/073,623**

(22) Filed: **Nov. 6, 2013**

(65) **Prior Publication Data**

US 2015/0086202 A1 Mar. 26, 2015

(30) **Foreign Application Priority Data**

Sep. 25, 2013 (IN) 2833/DEL/2013

(51) **Int. Cl.**
H04J 14/00 (2006.01)
H04J 14/02 (2006.01)
H04Q 11/00 (2006.01)

(52) **U.S. Cl.**
CPC ***H04Q 11/0005*** (2013.01); ***H04J 14/021*** (2013.01); ***H04J 14/0257*** (2013.01); ***H04J 14/0267*** (2013.01); *H04Q 2011/0086* (2013.01)

(58) **Field of Classification Search**
USPC 398/57
See application file for complete search history.

(56) **References Cited**

U.S. PATENT DOCUMENTS

6,449,070 B1 * 9/2002 Izumi H04J 14/0221 359/337
7,286,760 B1 * 10/2007 Lam H04J 14/021 398/60
2002/0030864 A1 * 3/2002 Chaudhuri H04J 14/0227 398/5
2002/0191247 A1 * 12/2002 Lu H04B 10/03 398/79
2009/0296710 A1 * 12/2009 Agrawal H04L 45/04 370/392
2009/0296719 A1 * 12/2009 Maier H04L 45/12 370/400

OTHER PUBLICATIONS

Mokhtar et al., Adaptive Wavelength Routing in All-Optical Networks, 1998, IEEE, pp. 197-206.*
Kuppuswamy et al., An Analytic Approach to Efficiently Computing Call Blocking Probabilities for Multiclass WDM Networks, 2009, IEEE, pp. 658-670.*
Lu et al., Analysis of Blocking Probability for Distributed Lightpath Establishment in WDM Optical Networks, 2005, IEEE, pp. 187-197.*

(Continued)

Primary Examiner — Ken N Vanderpuye
Assistant Examiner — Jai Lee
(74) *Attorney, Agent, or Firm* — Clements Bernard PLLC; Christopher L. Bernard; Lawrence A. Baratta, Jr.

(57) **ABSTRACT**

Embodiments of the disclosure are directed to optimizing routing and wavelength assignment in a network. An embodiment determines a routing assignment for a network, wherein the routing assignment is determined using a decongestion cost-based function; and determines a wavelength assignment for the network based on vector difference. The determination of the wavelength assignment comprises spanning the network for a path; calculating a weighted correlation function for at least one length in the network; storing the weighted correlation; and determining if a next path exists. If a next path is found, spanning for a next path in the network, and if a next path is not found, returning the stored correlation.

29 Claims, 13 Drawing Sheets

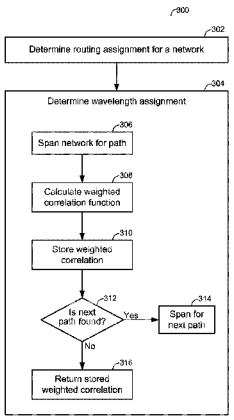

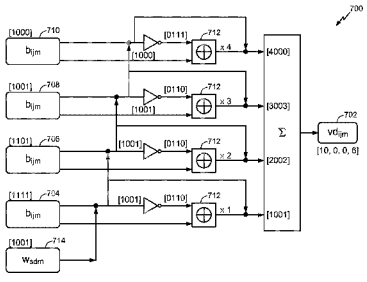

(56) **References Cited**

OTHER PUBLICATIONS

Zhu et al., A Path Decomposition Approach for Computing Blocking Probabilities in Wavelength-Routing Networks, 2000, IEEE, pp. 747-762.*

Chu et al., Dynamic Routing and Wavelength Assignment in the Presence of Wavelength Conversion for All-Optical Network, 2005, IEEE, pp. 704-715.*

Prakash et al., Enhanced Wavelength Routing and Assignment schemes in DWDM networks to reduce blocking due to wavelength continuity, May 15, 2013.*

Prakash et al., "Enhanced Wavelength Routing and Assignment schemes in DWDM networks to reduce blocking due to wavelength continuity," White Paper. May 15, 2013. p. 1-22.

Zhu et al., "A Path Decomposition Approach for Computing Blocking Probabilities in Wavelength-Routing Networks," IEEE/ACM Transactions on Networking, vol. 8, No. 6, Dec. 2000. p. 747-762.

Mokhtar et al., "Adaptive Wavelength Routing in All-Optical Networks," IEEE/ACM Transactions on Networking, vol. 6, No. 2, Apr. 1998. p. 197-206.

Kuppuswamy et al., "An Analytic Approach to Efficiently Computing Call Blocking Probabilities for Multiclass WDM Networks," IEEE/ACM Transactions on Networking, vol. 17, No. 2, Apr. 2009. p. 658-670.

Lu et al., "Analysis of Blocking Probability for Distributed Lightpath Establishment in WDM Optical Networks," IEEE/ACM Transactions on Networking, vol. 13, No. 1, Feb. 2005. p. 187-197.

Sridharan et al., "Blocking in All-Optical Networks," IEEE/ACM Transactions on Networking, vol. 12, No. 2, Apr. 2004. p. 384-397.

Chu et al., "Dynamic Routing and Wavelength Assignment in the Presence of Wavelength Conversion for All-Optical Networks." IEEE/ACM Transactions on Networking, vol. 13, No. 3, Jun. 2005. p. 704-715.

* cited by examiner

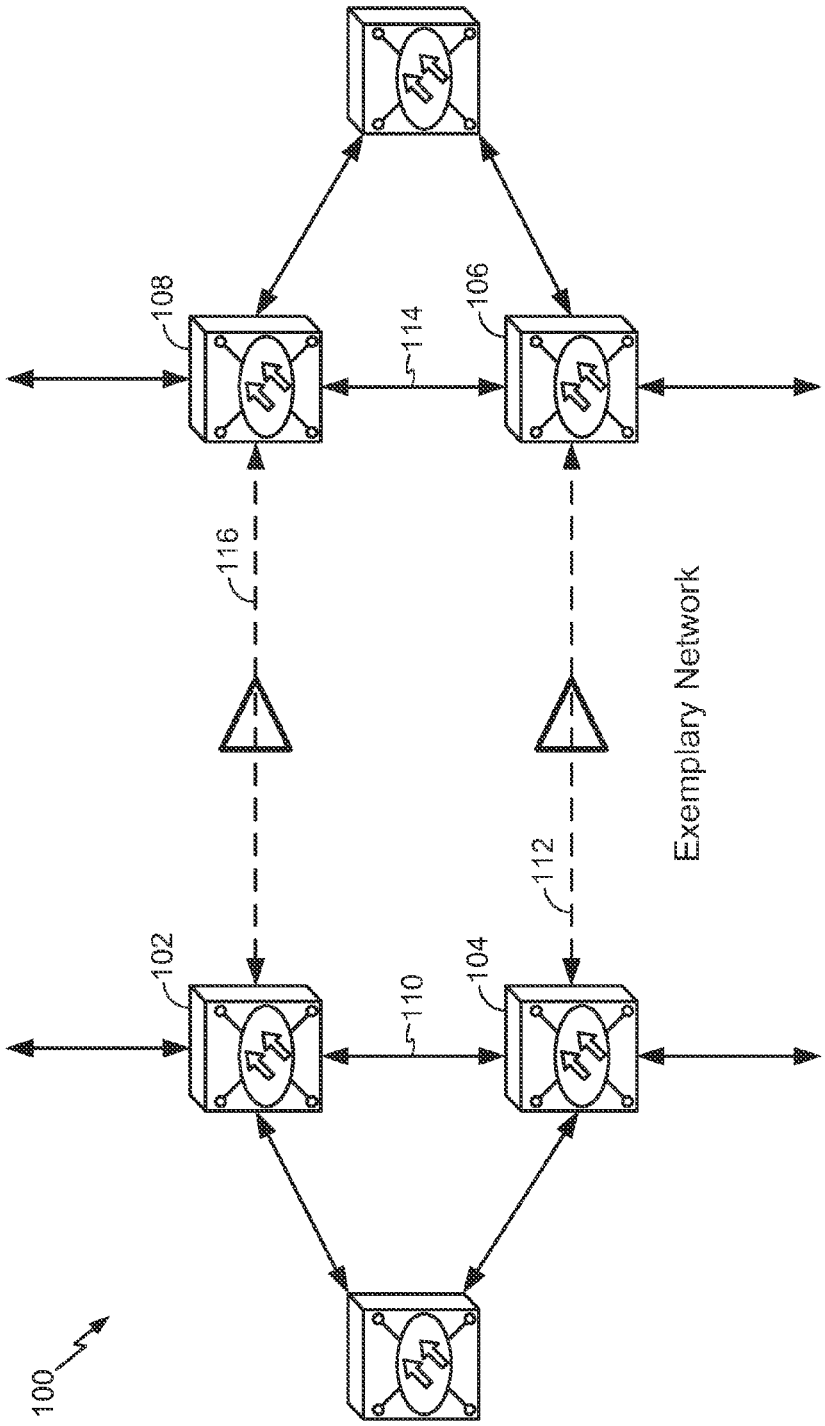

(PRIOR ART)
FIG. 1

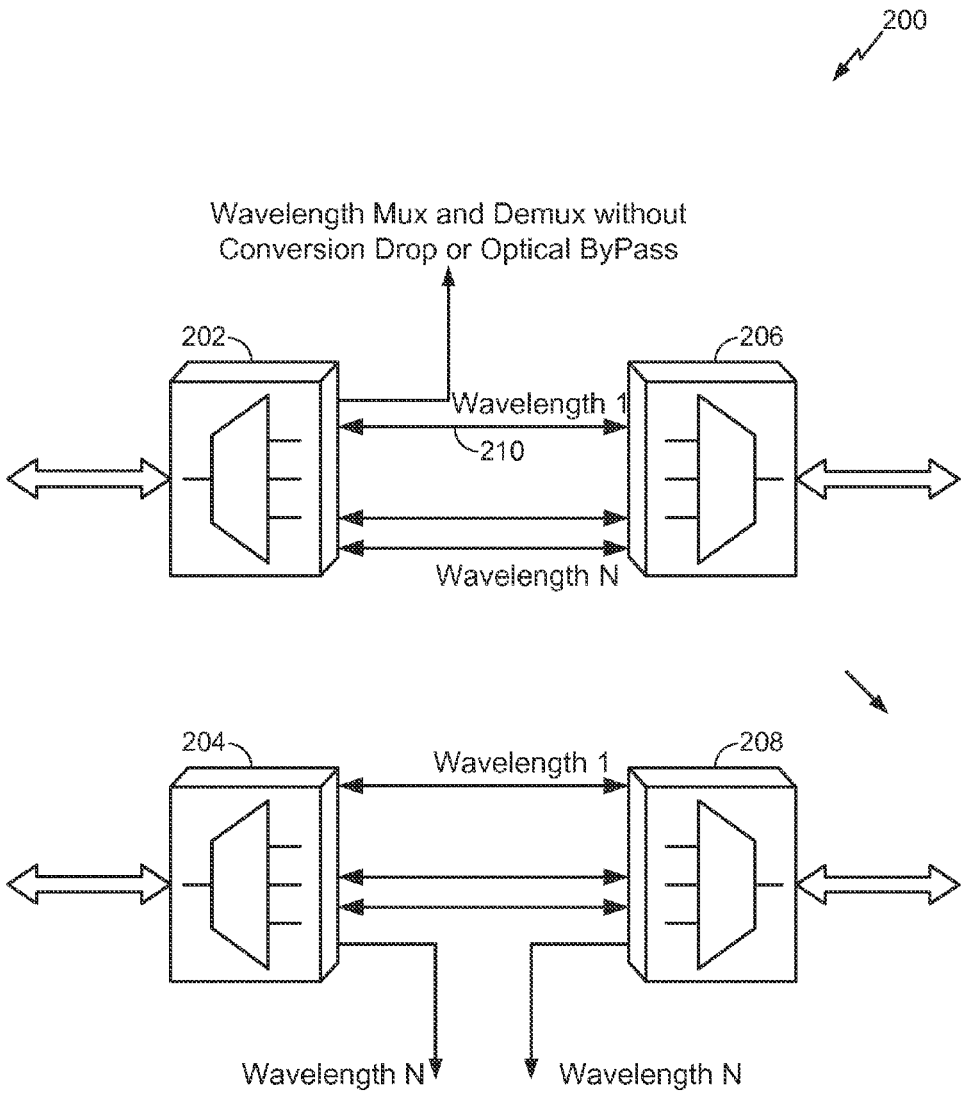
200
Wavelength Mux and Demux without
Conversion Drop or Optical ByPass
202
206
Wavelength 1
210
Wavelength N
204
208
Wavelength 1
Wavelength N
Wavelength N

FIG. 2

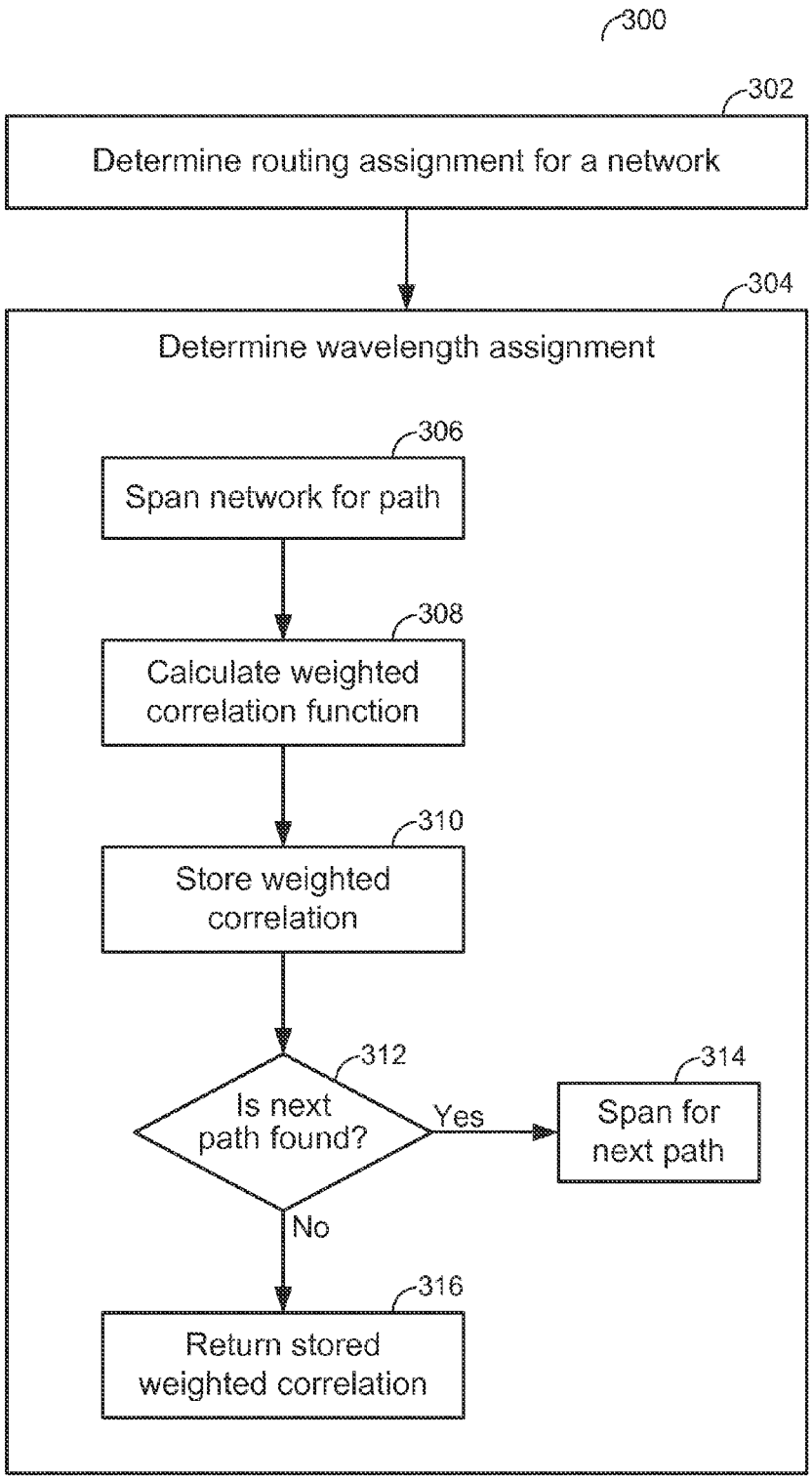
300
302
Determine routing assignment for a network
304
Determine wavelength assignment
306
Span network for path
308
Calculate weighted correlation function
310
Store weighted correlation
312
Is next path found?
Yes
314
Span for next path
No
316
Return stored weighted correlation

FIG. 3

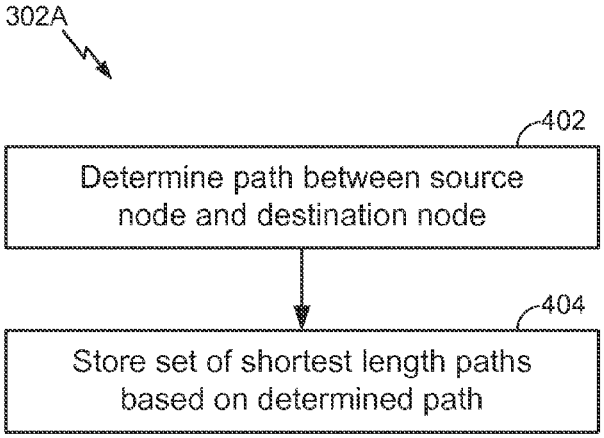
302A
402
Determine path between source node and destination node
404
Store set of shortest length paths based on determined path

FIG. 4A

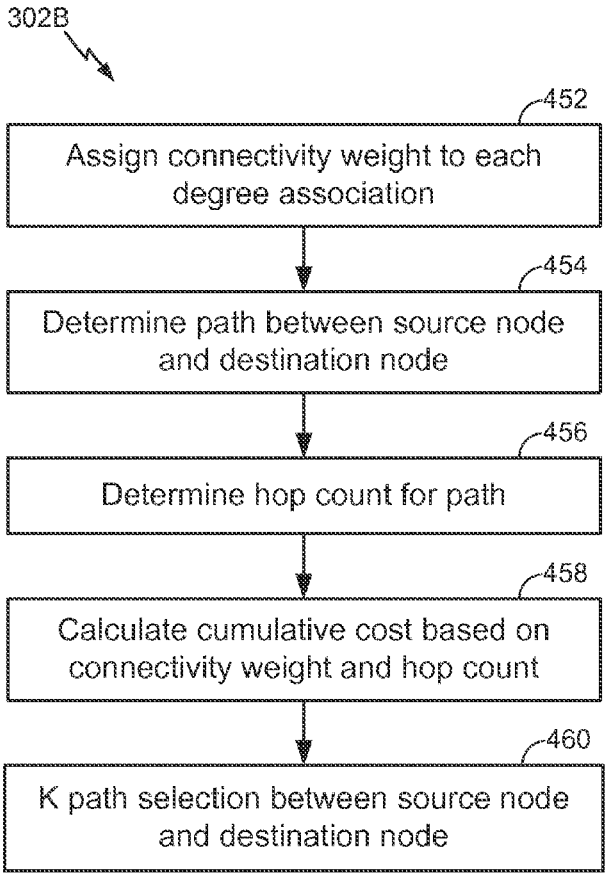
302B
452
Assign connectivity weight to each degree association
454
Determine path between source node and destination node
456
Determine hop count for path
458
Calculate cumulative cost based on connectivity weight and hop count
460
K path selection between source node and destination node

FIG. 4B

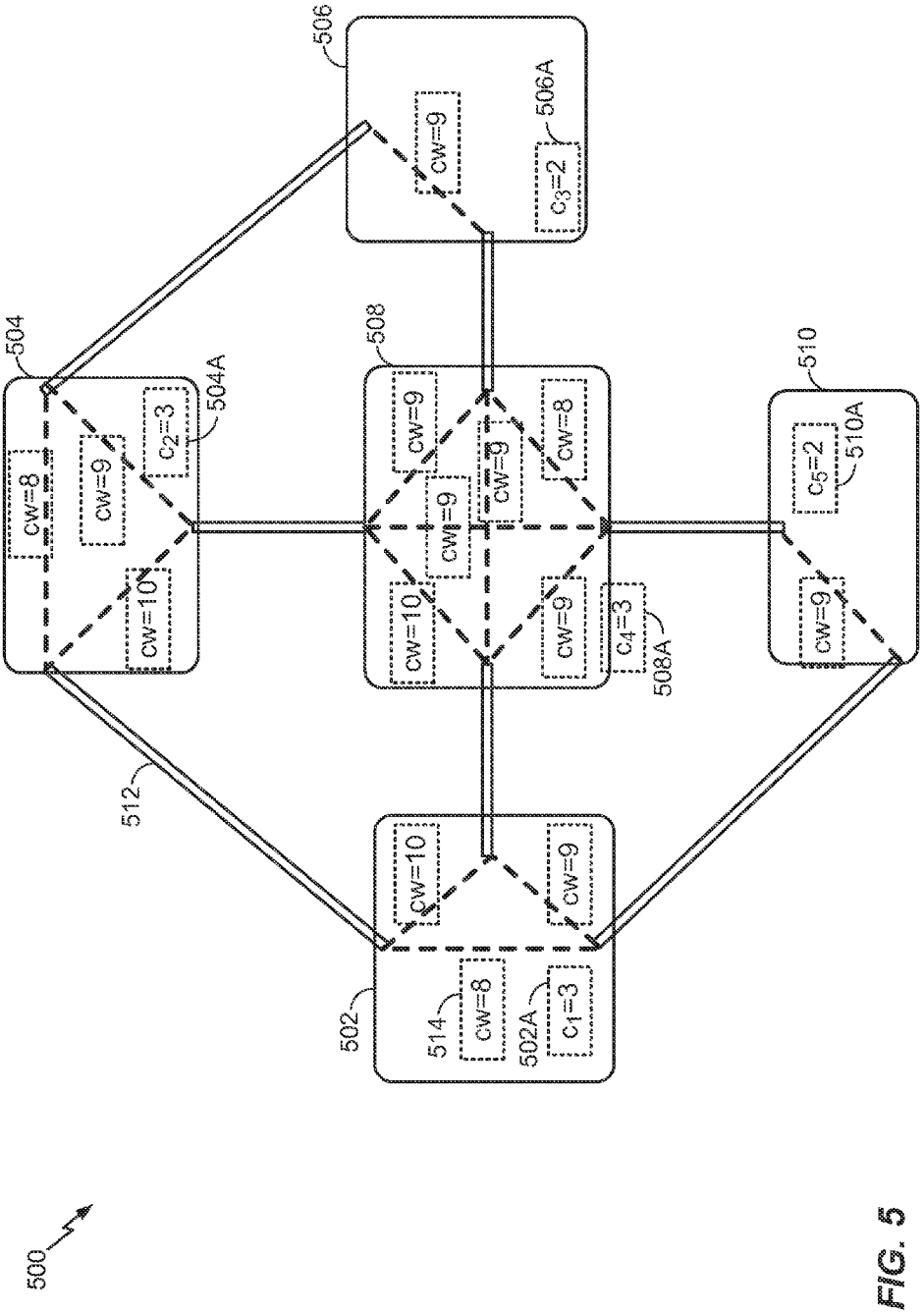
500
502
502A
514
CW=8
c_1=3
CW=10
CW=9
504
504A
CW=8
CW=9
c_2=3
CW=10
506
506A
CW=9
c_3=2
508
508A
CW=10
CW=9
CW=9
CW=9
CW=8
c_4=3
510
510A
c_5=2
CW=9
512

FIG. 5

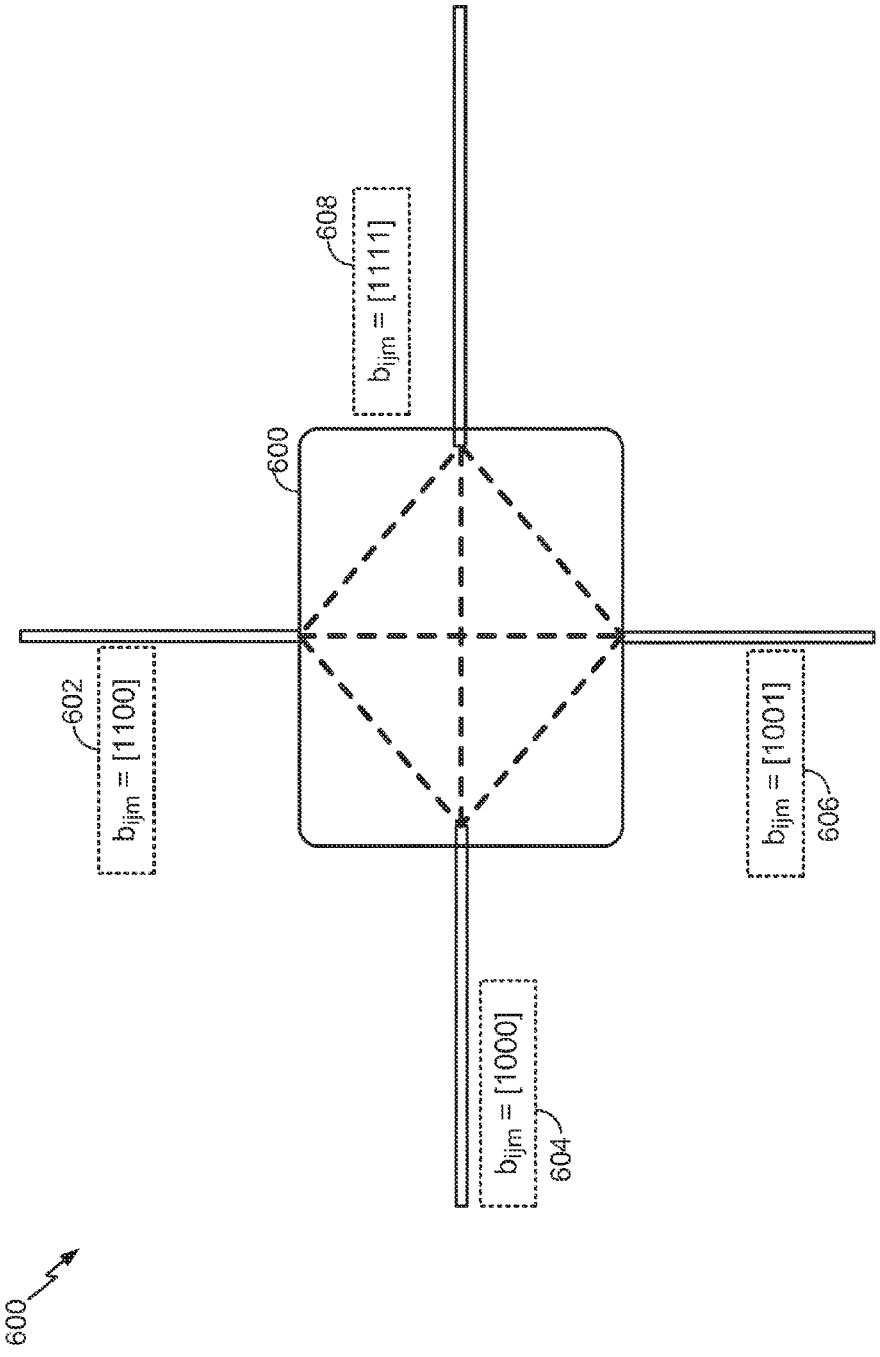
600
608
b_{ijm} = [1111]
600
602
b_{ijm} = [1100]
b_{ijm} = [1001]
606
b_{ijm} = [1000]
604
600

FIG. 6

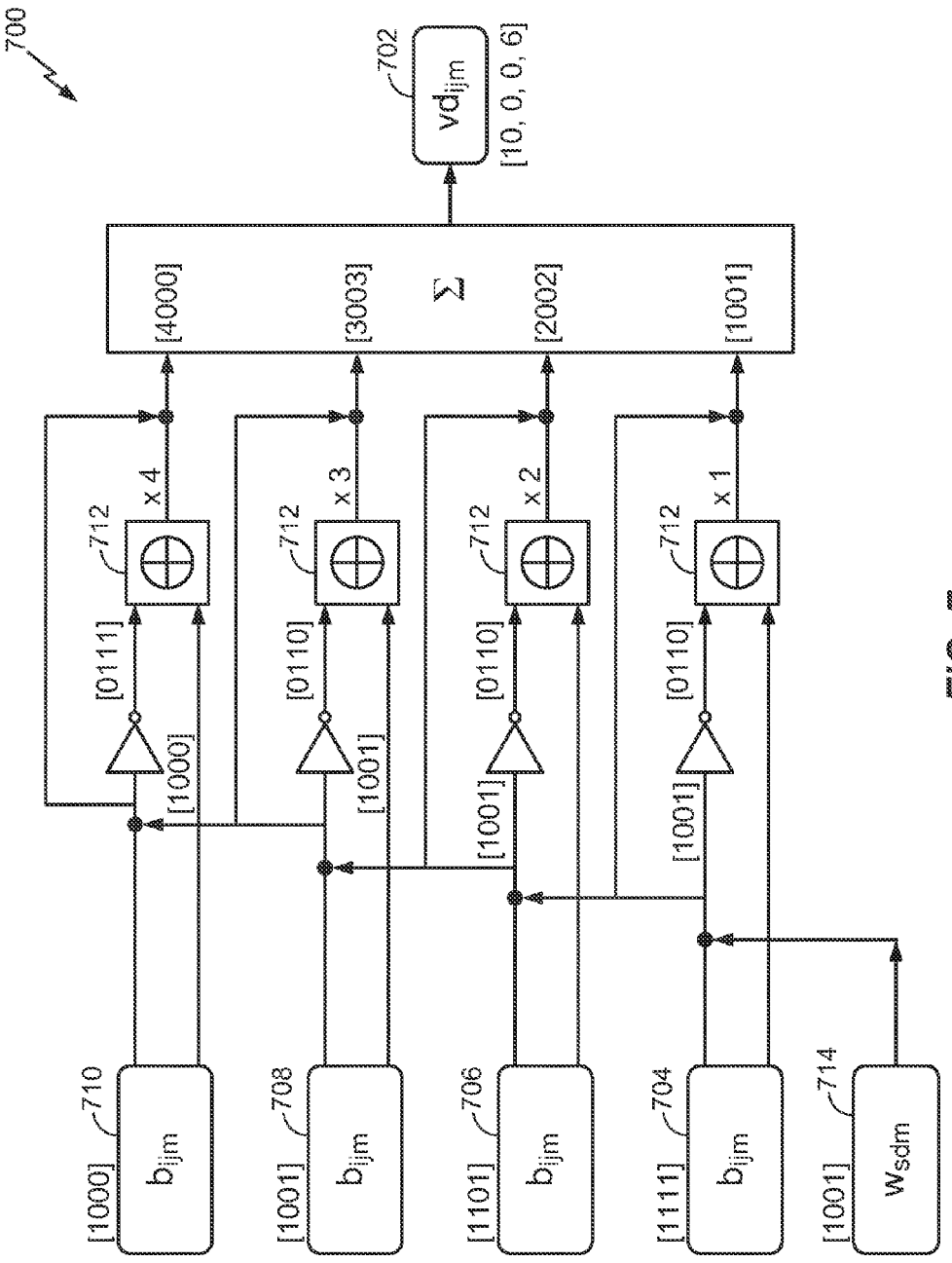
700
702
vd_{ijm}
[10, 0, 0, 6]
Σ
[4000]
[3003]
[2002]
[1001]
712
x 4
x 3
x 2
x 1
[0111]
[0110]
[1000]
[1001]
710
708
706
704
714
b_{ijm}
w_{sdm}
[1000]
[1001]
[1101]
[1111]
[1001]

FIG. 7

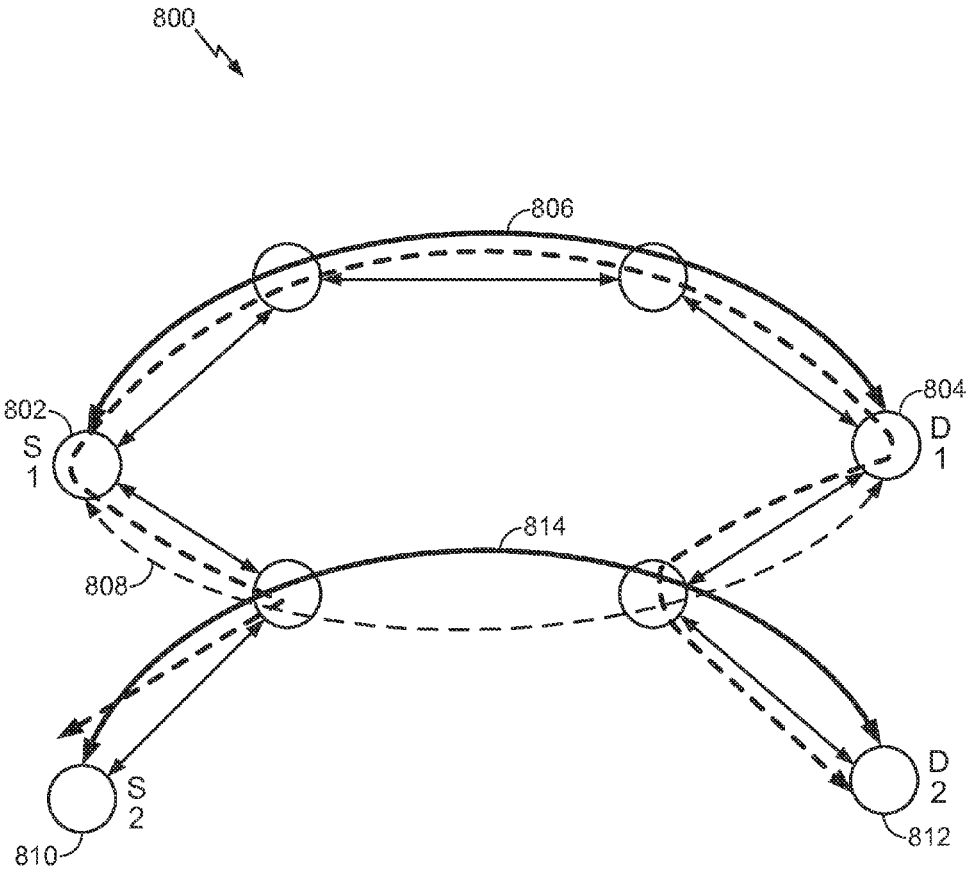

FIG. 8

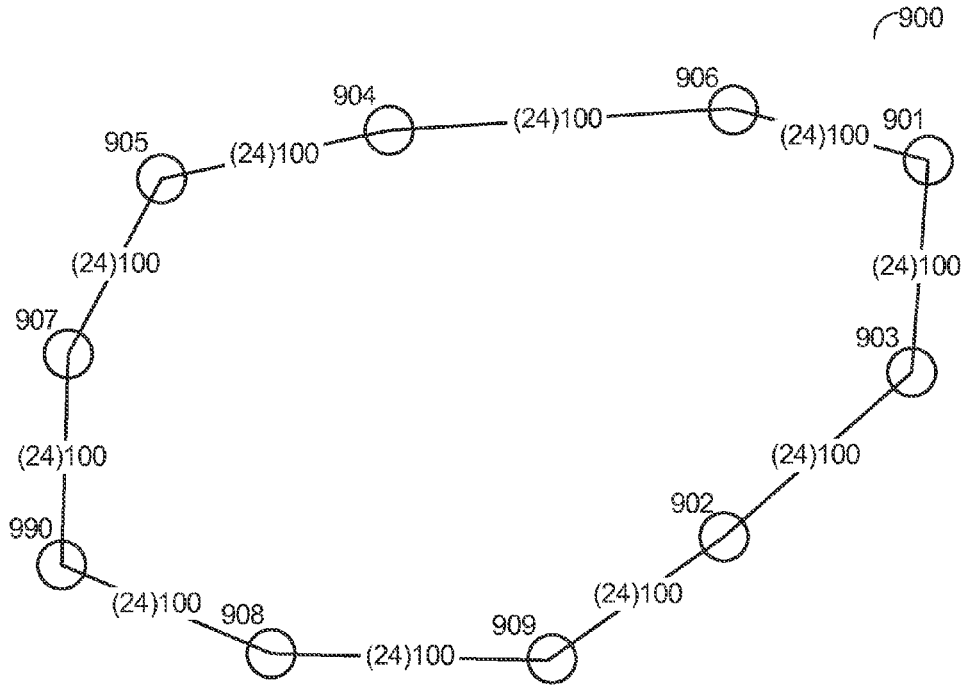
900
901
902
903
904
905
906
907
908
909
990
(24)100

FIG. 9

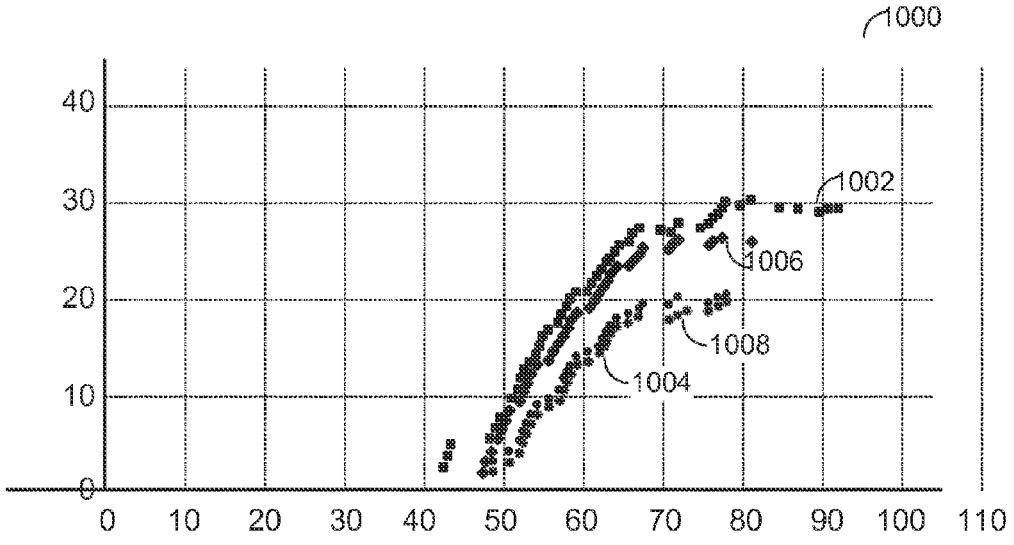
1000
1002
1004
1006
1008
0
10
20
30
40
50
60
70
80
90
100
110

FIG. 10

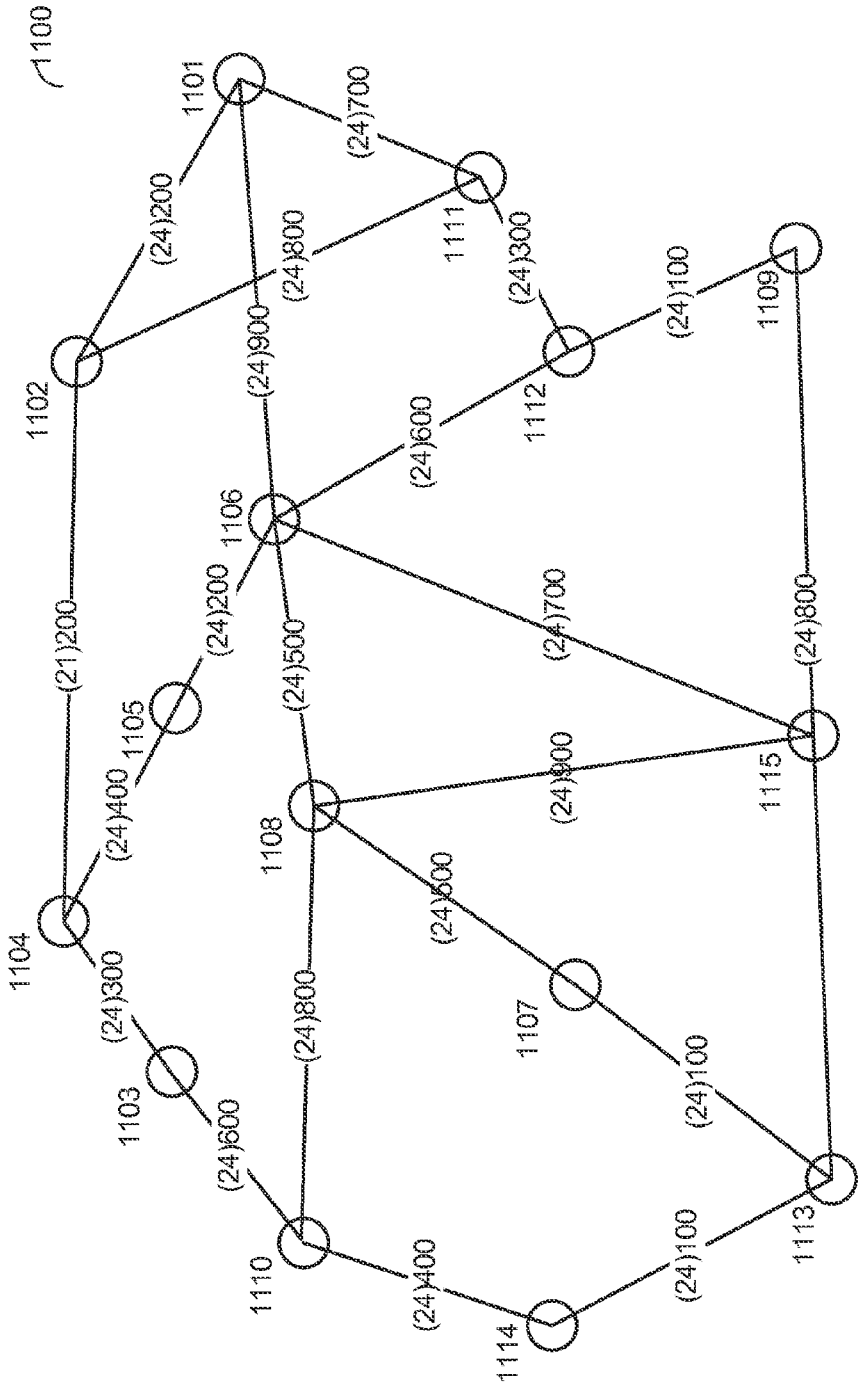
1100
1101
1102
1103
1104
1105
1106
1107
1108
1109
1110
1111
1112
1113
1114
1115
(24)200
(24)700
(24)800
(24)300
(24)100
(24)900
(24)600
(21)200
(24)200
(24)500
(24)700
(24)800
(24)400
(24)900
(24)500
(24)300
(24)800
(24)100
(24)600
(24)400
(24)100

FIG. 11

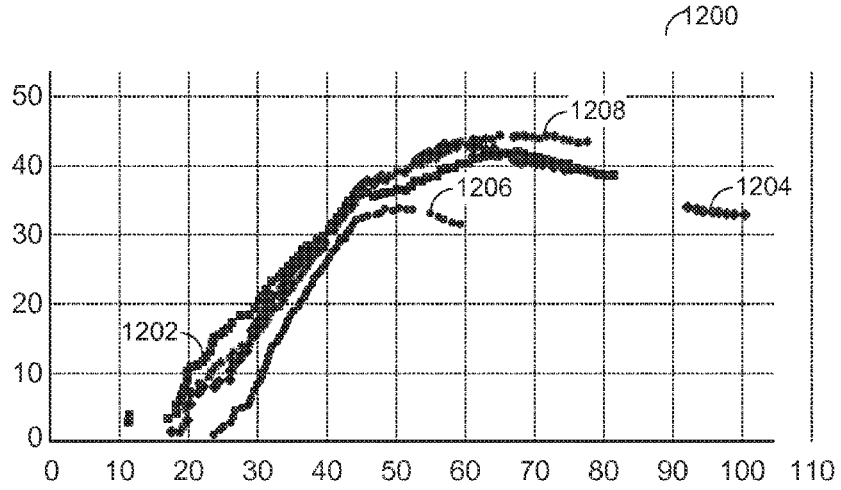
1200
50
40
30
20
10
0
0 10 20 30 40 50 60 70 80 90 100 110
1208
1206
1204
1202

FIG. 12

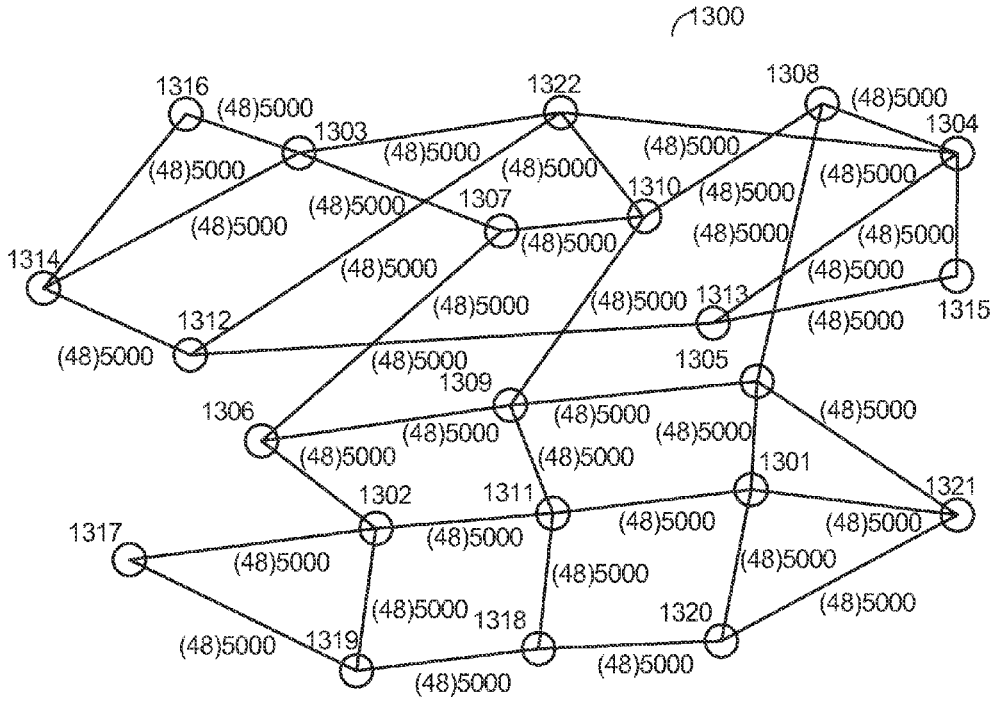
1300
1316
1322
1308
1303
1304
1307
1310
1314
1312
1313
1315
1305
1309
1306
1301
1321
1302
1311
1317
1318
1320
1319
(48)5000

FIG. 13

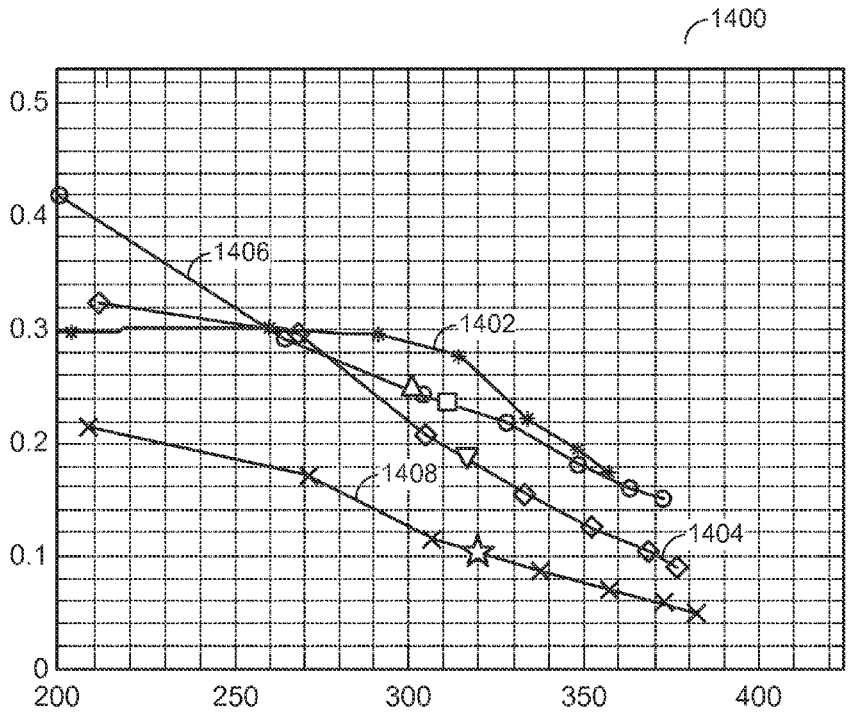
1400
0.5
0.4
0.3
0.2
0.1
0
200
250
300
350
400
1406
1402
1408
1404

FIG. 14

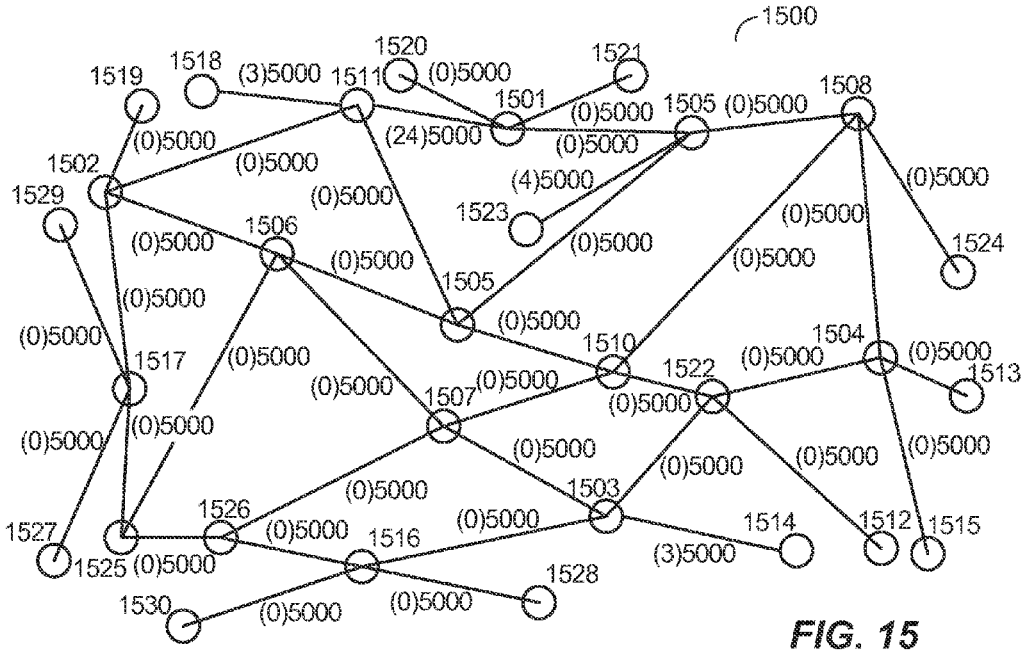
1500
1519
1518
(3)5000
1511
1520
(0)5000
1521
1501
(0)5000
1505
(0)5000
1508
(0)5000
(24)5000
(0)5000
1502
(0)5000
(4)5000
(0)5000
1529
(0)5000
1523
(0)5000
1506
(0)5000
(0)5000
(0)5000
1524
(0)5000
1505
(0)5000
(0)5000
1510
1504
(0)5000
1517
(0)5000
1522
(0)5000
1513
(0)5000
1507
(0)5000
(0)5000
(0)5000
(0)5000
(0)5000
(0)5000
(0)5000
1503
1526
(0)5000
1514
1512
1515
1527
1516
(0)5000
(3)5000
1525
(0)5000
1528
1530
(0)5000
(0)5000

FIG. 15

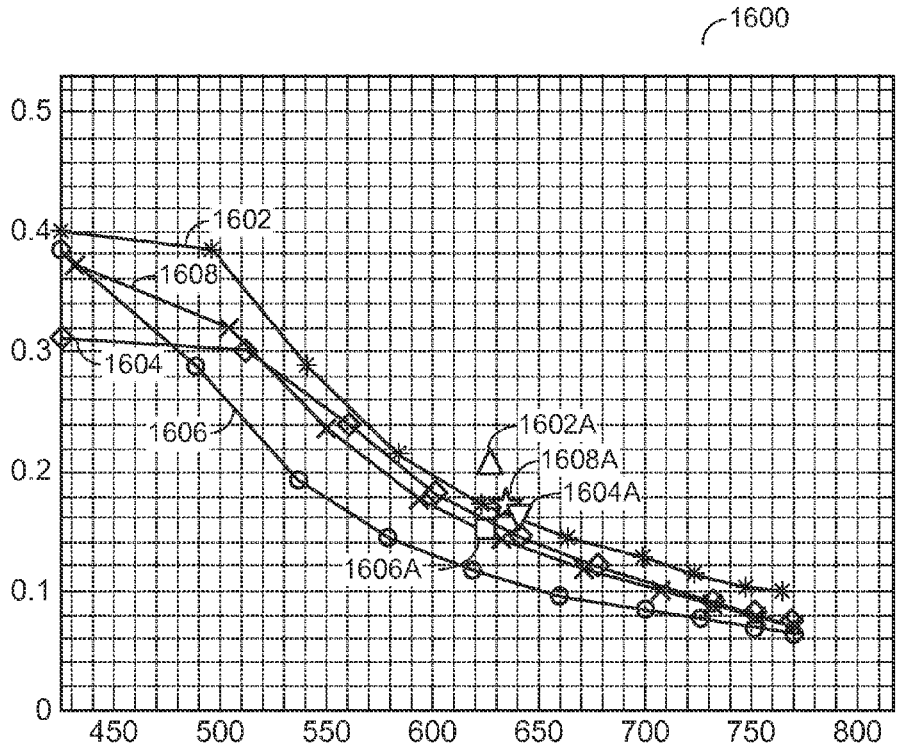
1600
0.5
0.4
0.3
0.2
0.1
0
450
500
550
600
650
700
750
800
1602
1608
1604
1606
1602A
1608A
1604A
1606A

FIG. 16

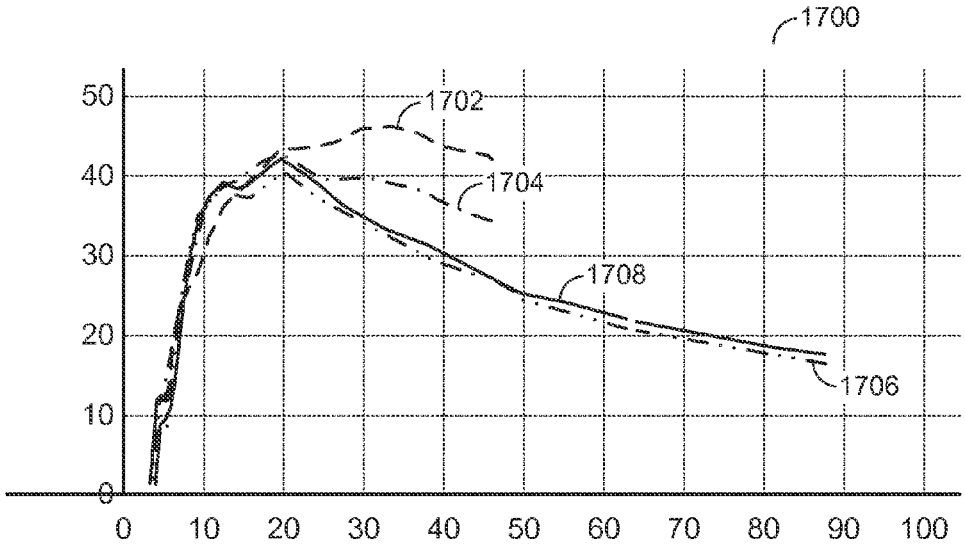
1700
50
40
30
20
10
0
0
10
20
30
40
50
60
70
80
90
100
1702
1704
1708
1706

FIG. 17

ENHANCED ROUTING AND WAVELENGTH ASSIGNMENT TECHNIQUES FOR REDUCING WAVELENGTH CONTINUITY BLOCKING

BACKGROUND OF THE INVENTION

1. Field of the Invention

Embodiments of the disclosure are directed to optimizing routing and wavelength assignment in network.

2. Description of the Related Art

Photonic transport solutions support various configurations like Optical amplifiers, Regenerators, Reconfigurable Optical Add-Drop Multiplexers (ROADMs), and switches. These are used for various applications like wavelength switching, conversion and reuse. Wavelength division multiplexing (WDM) technologies can provide the increase in network capacity to meet the growing traffic demands in optical networks. In a WDM network, the fiber bandwidth is divided into multiple frequency bands called wavelengths. Using ROADMs at network nodes, some of these wavelengths can be selected at each node for termination and electronic processing and others for optical bypass. In all optical network architectures, each traffic session optically bypasses electronic processing at each node on its path other than the source node and the destination node.

Routing and wavelength assignment refers to determining a route and wavelength for all the client requests. The same wavelength cannot be assigned to multiple light paths. If no wavelength conversion is possible, then a light path must be assigned the same wavelength on all links in its route. Without optical wavelength conversion, routing traffic sessions are subjected to wavelength continuity constraint. Wavelength continuity constraint dictates that the light path corresponding to a given session must travel on the same wavelength on all links from source to destination node.

SUMMARY

Systems and methods according to various exemplary embodiments can include features and benefits such as, but not limited to, using continuity checks to reduce wavelength continuity blocking probability.

According to one embodiment, a method for optimizing routing and wavelength assignment in a network can comprise: determining a routing assignment for a network, wherein the routing assignment is determined using a decongestion cost-based function; and determining a wavelength assignment for the network based on vector difference. The determination of the wavelength assignment can comprise: spanning the network for a path; calculating a weighted correlation function for at least one length in the network; storing the weighted correlation; and determining if a next path exists. If a next path is found, spanning for a next path in the network, and if a next path is not found, returning the stored correlation.

According to one embodiment, an apparatus for optimizing routing and wavelength assignment in a network can comprise: logic for determining a routing assignment for a network, wherein the routing assignment is determined using a decongestion cost-based function; and logic for determining a wavelength assignment for the network based on vector difference. The determination of the wavelength assignment can comprise: logic for spanning the network for a path; logic for calculating a weighted correlation function for at least one length in the network; logic for storing the weighted correlation; and logic for determining if a next path exists; logic for spanning for a next path in the network if a next path is found, and logic for returning the stored correlation if a next path is not found.

According to one embodiment, an apparatus for optimizing routing and wavelength assignment in a network can comprise: means for determining a routing assignment for a network, wherein the routing assignment is determined using a decongestion cost-based function; and means for determining a wavelength assignment for the network based on vector difference. The determination of the wavelength assignment can comprise: means for spanning the network for a path; means for calculating a weighted correlation function for at least one length in the network; means for storing the weighted correlation; and means for determining if a next path exists; means for spanning for a next path in the network if a next path is found, and means for returning the stored correlation if a next path is not found.

According to one embodiment, a computer-readable storage medium for optimizing routing and wavelength assignment in a network can comprise: at least one instruction to determine a routing assignment for a network, wherein the routing assignment is determined using a decongestion cost-based function; and at least one instruction to determine a wavelength assignment for the network based on vector difference. The determination of the wavelength assignment can comprise: at least one instruction to span the network for a path; at least one instruction to calculate a weighted correlation function for at least one length in the network; at least one instruction to store the weighted correlation; and at least one instruction to determine if a next path exists; at least one instruction to span for a next path in the network if a next path is found, and at least one instruction to return the stored correlation if a next path is not found.

Other aspects and advantages associated with the embodiments disclosed herein will become apparent to those skilled in the art based on the accompanying drawings and detailed description.

BRIEF DESCRIPTION OF THE DRAWINGS

A more complete appreciation of aspects of the disclosure and many of the attendant advantages thereof will be readily obtained as the same becomes better understood by reference to the following detailed description when considered in connection with the accompanying drawings which are presented solely for illustration and not limitation of the disclosure, and in which:

FIG. **1** illustrates an exemplary Reconfigurable Optical Add-Drop Multiplexer (ROADM) configuration, which is known in the art.

FIG. **2** illustrates exemplary intra-node partial connectivity.

FIG. **3** illustrates an exemplary flow for optimizing routing and wavelength assignment in network.

FIG. **4**A illustrates an exemplary flow of a routing assignment.

FIG. **4**B illustrates another exemplary flow of a routing assignment.

FIG. **5** illustrates exemplary inter-node connectivity weights.

FIG. **6** illustrates exemplary wavelength continuity blocking.

FIG. **7** illustrates an exemplary vector difference with continuity evaluation tree.

FIG. **8** illustrates exemplary choices of path and wavelength for non-blocking.

FIG. **9** illustrates an exemplary ring network.

FIG. **10** illustrates an exemplary graph of blocking probability curves for wavelength continuity in a ring network.

FIG. **11** illustrates an exemplary node metro network.

FIG. **12** illustrates an exemplary graph of MST continuity blocking probability curves for wavelength continuity in a node metro network.

FIG. **13** illustrates an exemplary node mesh network.

FIG. **14** illustrates an exemplary graph of a 22 node mesh bp_{wlc} for uniform demand maps.

FIG. **15** illustrates an exemplary node mesh with star topologies.

FIG. **16** illustrates an exemplary graph of a 30 node mesh bp_{wlc} for uniform demand maps.

FIG. **17** illustrates an exemplary graph of MST continuity blocking probability curves for wavelength continuity in a node mesh with star topologies.

DETAILED DESCRIPTION

Various aspects are disclosed in the following description and related drawings. Alternate aspects may be devised without departing from the scope of the disclosure. Additionally, well-known elements of the disclosure will not be described in detail or will be omitted so as not to obscure the relevant details of the disclosure.

The words "exemplary" and/or "example" are used herein to mean "serving as an example, instance, or illustration." Any aspect described herein as "exemplary" and/or "example" is not necessarily to be construed as preferred or advantageous over other aspects. Likewise, the term "aspects of the disclosure" does not require that all aspects of the disclosure include the discussed feature, advantage or mode of operation.

Further, many aspects are described in terms of sequences of actions to be performed by, for example, elements of a computing device. It will be recognized that various actions described herein can be performed by specific circuits (e.g., application specific integrated circuits (ASICs)), by program instructions being executed by one or more processors, or by a combination of both. Additionally, these sequence of actions described herein can be considered to be embodied entirely within any form of computer readable storage medium having stored therein a corresponding set of computer instructions that upon execution would cause an associated processor to perform the functionality described herein. Thus, the various aspects of the disclosure may be embodied in a number of different forms, all of which have been contemplated to be within the scope of the claimed subject matter. In addition, for each of the aspects described herein, the corresponding form of any such aspects may be described herein as, for example, "logic configured to" perform the described action.

Data communication networks may include various computers, servers, nodes, routers, switches, bridges, hubs, proxies, and other network devices coupled to and configured to pass data to one another. These devices are referred to herein as "network elements" or "network devices." Data is communicated through the data communication network by passing protocol data units, such as Internet Protocol (IP) packets, Ethernet Frames, data cells, segments, or other logical associations of bits/bytes of data, between the network elements by utilizing one or more communication links between the network elements. A particular protocol data unit may be handled by multiple network elements and cross multiple communication links as it travels between its source and its destination over the network.

A "dark section" is a section wherein all the amplifier blocks in the section remain in shutoff state due to loss of light (i.e., that no traffic carrying channels or wavelengths are present in the system).

FIG. **1** illustrates an exemplary Reconfigurable Optical Add-Drop Multiplexer (ROADM) configuration **100**, which is known in the art. ROADMs **102**, **104**, **106**, and **108** are all part of the same network. The links **110**, **112**, **114**, and **116** have various wavelength frequencies on which they can communicate. For example, links **112** and **114** have the same frequency. Therefore, ROADM **104** can transmit to ROADM **108** using one wavelength frequency. However, ROADM **102** cannot communicate with ROADM **106** through ROADM **104** without, for example, a Regenerator. This limitation exists because link **110** and link **112** are different frequencies, and thus, wavelength continuity constraints occur within the network.

FIG. **2** illustrates exemplary intra-node partial connectivity. Within a node **200**, there are multiplexers **202**, **204** and demultiplexers **206**, **208**. These are coupled to communicate within the node. As shown, the intra-node communication is not a fully connected mesh. For example, a path **210** can exist from multiplexer **202** to demultiplexer **206**, but not from multiplexer **204** to demultiplexer **206**. This partial connectivity can be considered a constraint on an optical network.

FIG. **3** illustrates an exemplary flow for optimizing routing and wavelength assignment in a network **300**. The network can comprise a heterogeneous bandwidth composition.

At **302**, a routing assignment is determined for a network using a cost-based function. Some embodiments can include a Dijkstra-based shortest path first (SPF) algorithm with extensions to K-SPF; congestion cost based algorithms; genetic algorithms; prediction algorithms; and ILP-based algorithms. Embodiments of the cost based algorithm are further described in FIGS. **4**A and B.

At **304**, a wavelength assignment is determined for the network based on vector difference. The wavelength assignment is a selection and reservation of a wavelength from a choice of a set of wavelengths returned by the routing algorithm. The wavelength assignment determination can include the following actions.

At **306**, the network can be spanned for a path.

At **308**, a weighted correlation function can be calculated for at least one length in the network. A vector difference correlates a wavelength vector with all other link within a node, which can be reached from any of the nodes in the lightpath reservation path adhering to wavelength continuity constraint. As the number of these wavelength vectors in a single correlation increases, the weightage for the same can also increase. In some embodiments, a particular wavelength usage in the network can be directly proportional to the blocking probability for that wavelength in the network. In some embodiments the vector difference can be calculated over all the links or MST (minimum spanning tree) of the network without wavelength continuity constraints.

$$vd_{sdm} = \sum_{i=1}^{V} \sum_{k>=j}^{E_i} a_k \{ w'_{s,d,m} \oplus b_{i,j,m} \oplus b_{i,k,m} \ \dots \ \}$$

$$vd_{sdm} = \sum_{i=1}^{V} a_k \{ w'_{s,d,m} \oplus b_{i,j,m} \oplus b_{i,k,m} \ \dots \ \}$$

-continued

where $w'_{s,d,m} = \overline{\{w_{s,d,m} \cdot b_{i,j,m} \ \dots \ \}}$

where $a_k < a_{k+1}$

$\lambda_{select,m} = \min\{vd\lambda_1, vd\lambda_2 \ \dots \ , vd\lambda_m\}$

At **310**, the calculated weighted correlation is stored. At **312**, it is determined whether a next path is found. If a next path is found, the flow continues to **314**. At **314**, the next path is spanned. If a next path is not found, the flow continues to **316**. At **316**, the stored weighted correlation is returned.

In some instances, more than one wavelength can be specified. In some embodiments, a vector difference can be calculated to reduce computational complexity. For example, the vector difference can be calculated for MST links. MST can be recalculated if an MST link drops to zero available bandwidth. In some embodiments, a vector difference can be calculated for all network links. For example, the vector difference can be calculated for all network links in a network larger than 30 nodes. In some embodiments, links within two-level proximity can be calculated for a current working path.

FIG. **4**A illustrates an exemplary flow of a routing assignment **302**A using a K-SPF algorithm. At **402**, at least one path is determined between the source node and the destination node. In some embodiments, the length of the path is determined as the number of links required to be traversed to travel on the path from the source node to the destination node.

At **404**, a set of shortest length paths between the source node and the destination node is stored. The set can be one path or more than one path. In some embodiments, a wavelength continuity constraint can be applied to create a wavelength availability vector. The diversification of routes can reduce a probability of blocking within the network because there is more than one shorter path to be taken.

$$P_{s,d}=(p_{1,s,d}p_{2,s,d} \cdots p_{k,s,d})$$

$$p_{s,d}=(e_{s,i}e_{i,j} \cdots e_{n,d})$$

$$w_{s,d,m}=(b_{s,i,m} \cdot b_{i,j,m} \cdot \cdots \cdot b_{n,d,m})$$

In some embodiments, the constraint can be applied such that a path with more hops may be included to increase the number of available paths in the network. For example, amongst the set of paths, shortest path may include highly congested links with higher utilization and other relatively longer paths with links which are underutilized. Hence using a slightly longer path can reduce congestion and increases the number of available routes in the network without noticeably increasing inefficiency.

To assist in calculating connectivity, each node can be calculated as not being connected to itself. In some embodiments, the intra connectivity within the node can be represented as an N×N matrix representation where each degree uni-directional connectivity is represented.

FIG. **4**B illustrates another exemplary flow of a routing assignment **302**B using a decongestion algorithm.

At **452**, a connectivity weight is assigned to each cross connect within the source node. A connectivity weight is a normalized weightage, in terms of wavelengths, to an optical cross connect for the association between two degrees within a node. The connectivity weight is associated with the set of two links and the three nodes for those two links. Thus, degree association can be preserved in the parameter. The connectivity weight can represent the connectivity strain for the optical cross connect in the network. In some embodiments, the strain tensor can be represented as a matrix for a node. In some embodiments, a matrix can also be generated for a particular wavelength. The congestion factor in the following equations signifies the weight given to the connectivity matrix during route computation. An exemplary weighting assignment is as follows:

$$CW_r = \begin{pmatrix} cw_{1,1,m} & cw_{1,2,m} & \dots & cw_{1,n,m} \\ cw_{2,1,m} & cw_{2,2,m} & \dots & cw_{n,n,m} \\ \vdots & & \vdots & \\ cw_{n,1,m} & cw_{n,2,m} & \dots & cw_{n,n,m} \end{pmatrix} \quad (13)$$

(14)

$$cw_{i,j,m} = \frac{x_{cg} * \lambda_{max} * (c_r + c_i + c_j)}{\sum_{r:\ r \in neighbors,currentnode} c_r} \text{ for } i \neq j \quad (15)$$

$$cw_{i,j,m} = \frac{x_{cg} * \lambda_{max} * (c_r)}{\sum_{r:\ r \in neighbors,currentnode} c_r} \text{ for } i = j \quad (16)$$

where c_r is the connectivity count for Node v_r
and c_i is the degree count for Node v_{r+1} on degree i
and c_j is the degree count for Node v_{r-1} on degree j
and λ_{max} is the maximum wavelengths allowed on e_{ij}
and x_{cg} is Congestion Factor.

The example above is based on assigning weights to every possible cross connect within a node and thus implicitly applies to partial connectivity. The weights can be assigned to degree to degree association within a node.

At **454**, at least one path is determined between the source node and the destination node.

At **456**, a hop count is determined for the at least one path. For example, a hop count can be taken by a path $p_{s;i}$, till node v_i from node v_s. The cumulative or incremental cost can be defined as:

$$\text{cost}_{s,i}=\text{cost}_{s,i-1}=cw_{i,j,m}\cdot(\text{current hop count}) \quad (17)$$

$$p_{s,d,selected}=\min(\text{cost}_{s,i}) \quad (18)$$

At **458**, a cost is calculated based on the connectivity weight and the hop count.

At **460**, K paths are selected based on the cumulative cost calculated to be considered for wavelength assignment. In some embodiments, the preferred path will be the path with the lowest connectivity weight and the lowest hop count. When this example is not available, a determination between a path with a higher connectivity weight and a lower hop count or a lower connectivity weight and a higher hop count may be necessary.

FIG. **5** illustrates exemplary inter-node connectivity weights. ROADM nodes **502**, **504**, **506**, **508**, **510** are connected in a network **500**. As shown in FIG. **5**, ROADM nodes **502** and **504** are connected through a link **512**. A connectivity count **502**A, **504**A, **506**A, **508**A, **510**A can be described as the number of cross connections. A connectivity weight **514**, on the other hand, can be described as the degree of cross connections. For example, the degree of cross-connections between ROADM nodes **502**, **504** is 8.

FIG. **6** illustrates exemplary wavelength continuity blocking. In FIG. **6**, there are four links to ROADM **600**. Available paths are provided by matrices as shown for each link, **602**, **604**, **606**, **608**. As shown, wavelength 1 is available to all four links. If two of the links use wavelength 1,

the other two paths are blocked, as is wavelength continuity. Using the fourth wavelength to communicate between link **602** and **608**, however, means that all other wavelengths are available.

In some instances, vector difference can be calculated. Vector difference can correlate a wavelength vector with all other links within a node. The node can be reached from any node in a lightpath reservation path. As vectors in a single correlation for the node increase, the weightage a_k for the difference can also increase. The cumulative vector difference can be expressed as either of the following equations:

$$vd_{sdm} = \sum_{i=1}^{V} \sum_{k>=j}^{E_i} a_k \{w'_{s,d,m} \oplus b_{i,j,m} \oplus b_{i,k,m} \ \dots \ \} \quad (20)$$

$$vd_{sdm} = \sum_{i=1}^{V} a_k \{w'_{s,d,m} \oplus b_{i,j,m} \oplus b_{i,k,m} \ \dots \ \} \quad (21)$$

where $w'_{s,d,m} = \overline{\{w_{s,d,m} \cdot b_{i,j,m} \ \dots \ \}}$

where $a_k < a_{k+1}$

$$\lambda_{select,m} = \min\{vd\lambda_1, vd\lambda_2 \ \dots \ , vd\lambda_m\} \quad (22)$$

An exemplary algorithm for vector difference with continuity constraints can be:

```
%%start at the source node
V ← V_s
while V ≠ ∅ do
  V_i ←V_i ∈ V
  V ← V –V_i
  for all e_ij in V_i do
    %% Skip if λ continuity is not met
    If {e_ijm & w_sdm} ≠ 0 then
      If V_j notvisited then
        V ← V + V_j
      end if
      λ_vector,i ← w_sdm & e_ijm
      for all e_ik in V_i : a_i + +: i ≠ k do
        %%calculate vector difference for all lambdas
        vd_ijm ← vector_difference(b_ijm,λ_vector,i,a_i+
        +)
        λ_vector,i ← λ_vector,i & b_ijm
      end for
    end if
    V_i ← visited
  end for
end while
```

A second exemplary algorithm for vector difference with continuity constraints can be:

```
%%start at the source node
V ←V_s
while V ≠ ∅ do
  V_i ← V_i ∈ V
  V ← V – V_i
  λ_vector,i ← w_sdm
  for all e_ij in V_i : a_i ++ do
    %%calculate difference for all lambdas
    vd_ijm ← vector_difference(b_ijm, λ_vector,i a_i)
    λ_vector,i ← λ_vector,j & b_ijm
    %% Skip if λ continuity is not met
    If vd_ijm ≠ 0 then
      If V_jnotvisited then
        V ← V + V_j
      end if
    end if
    V_i ← visited
  end for
end while
```

An evaluation logic tree **700** in FIG. **7** can be evaluated for every link as shown in equation 20. In equation 21, the evaluation logic tree **700** can be evaluated once. In order to reduce computational time, vd_{sdm} **702** can be calculated with a limited set of links **704**, **706**, **708**, **710**. For example, MST can be used for large networks. Links within two hop reach of the lightpath reservation route for small networks can be used. A vector difference calculation can be provided in the evaluation tree. The weightage a_k **712** assigned to the vector difference can be increased with the size of the set of links $\{b_{i,j,m}\}$ **704**, **706**, **708**, **710** for evaluating vd_{sdm}. This evaluation can provide a difference **702** for the first wavelength in w_{sdm} **714** as 10 whereas the difference **702** for the fourth wavelength in w_{sdm} **714** can be 6. Thus, the first wavelength is desired and can be discouraged.

FIG. **8** illustrates exemplary choices of path and wavelength for non-blocking. In a network **800** that has more than one path for a first source node **802** to a first destination node **804**, one path **806** may have more connectivity than a second path **808**. As shown here, both paths **806**, **808** have the same number of hops. However, the second path **808** can also provide connectivity for source node **810** and destination node **812** through a third path **814**. If both the second path **808** and the third path **814** are to be used, this can cause blocking issues. If the first path is weighted so that it is considered preferred, however, this can cause fewer blocking issues.

FIG. **9** illustrates an exemplary ring network **900** with nodes **900**-**910**. The connectivity count and connectivity weight are shown as (c)cw. In a ring network, a cost based algorithm should not have an impact because there is only one path through the ring. The wavelength assignment, however, can still be optimized.

FIG. **10** illustrates an exemplary realtime graph **1000** of blocking probability curves for wavelength continuity in a ring network. The data is as follows: Connectivity Weighted No Vector Difference **1002**; Connectivity Weighted with Vector Difference Network **1004**; Connectivity Weighted with Vector Difference MST Continuity **1006**; and Connectivity Weighted with Vector Difference Network Continuity **1008**

FIG. **11** illustrates an exemplary node metro network **1100** with nodes **1101**-**1115** and with assigned wavelengths. The connectivity count and connectivity weight are shown as (c)cw.

FIG. **12** illustrates an exemplary realtime graph **1200** of MST continuity blocking probability curves for wavelength continuity in a node metro network. The data is as follows: SPF No Vector Difference **1202**; Connectivity Weighted No Vector Difference **1204**; SPF with Vector Difference MST Continuity **1206**; and Connectivity Weighted with Vector Difference MST Continuity **1208**.

FIG. **13** illustrates an exemplary node mesh network **1300** with nodes **1301**-**1322** and with assigned wavelengths. The connectivity count and connectivity weight are shown as (c)cw.

FIG. **14** illustrates an exemplary graph **1400** of a 22 node mesh bp_{wlc} for uniform demand maps. In FIG. **14**, wavelength continuity blocking probability is plotted against lightpath requests met. The data is as follows: SPF No Vector Difference **1402**; SPF with Vector Difference MST Continuity **1404**; Connectivity Weighted No Vector Difference **1406**; and Connectivity Weighted with Vector Difference MST Continuity **1408**.

FIG. **15** illustrates an exemplary node mesh with star topologies **1500** with nodes **1501-1530** with assigned wavelengths. The connectivity count and connectivity weight are shown as (c)cw.

FIG. **16** illustrates an exemplary graph **1600** of a 30 node mesh bp_{wlc} for uniform demand maps. The data is as follows: SPF No Vector Difference **1602** with mean **1602**A; SPF with Vector Difference MST **1604** with mean **1604**A; Connectivity Weight Cost Function **1606** with mean **1606**A; and Connectivity Weight Cost Function with Vector Difference Wavelength Assignment **1608** with mean **1608**A.

FIG. **17** illustrates an exemplary realtime graph **1700** of MST continuity blocking probability curves for wavelength continuity in a node mesh with star topologies. SPF No Vector Difference **1702**; Connectivity Weighted No Vector Difference **1704**; SPF with Vector Difference MST Continuity **1706**; and Connectivity Weighted with Vector Difference MST Continuity **1708**.

Generally, unless stated otherwise explicitly, the phrase "logic configured to" as used throughout this disclosure is intended to invoke an aspect that is at least partially implemented with hardware, and is not intended to map to software-only implementations that are independent of hardware. Also, it will be appreciated that the configured logic or "logic configured to" in the various blocks are not limited to specific logic gates or elements, but generally refer to the ability to perform the functionality described herein (either via hardware or a combination of hardware and software). Thus, the configured logics or "logic configured to" as illustrated in the various blocks are not necessarily implemented as logic gates or logic elements despite sharing the word "logic." Other interactions or cooperation between the logic in the various blocks will become clear to one of ordinary skill in the art from a review of the aspects described below in more detail.

Those of skill in the art will appreciate that information and signals may be represented using any of a variety of different technologies and techniques. For example, data, instructions, commands, information, signals, bits, symbols, and chips that may be referenced throughout the above description may be represented by voltages, currents, electromagnetic waves, magnetic fields or particles, optical fields or particles, or any combination thereof.

Further, those of skill in the art will appreciate that the various illustrative logical blocks, modules, circuits, and algorithm steps described in connection with the aspects disclosed herein may be implemented as electronic hardware, computer software, or combinations of both. To clearly illustrate this interchangeability of hardware and software, various illustrative components, blocks, modules, circuits, and steps have been described above generally in terms of their functionality. Whether such functionality is implemented as hardware or software depends upon the particular application and design constraints imposed on the overall system. Skilled artisans may implement the described functionality in varying ways for each particular application, but such implementation decisions should not be interpreted as causing a departure from the scope of the present disclosure.

The various illustrative logical blocks, modules, and circuits described in connection with the aspects disclosed herein may be implemented or performed with a general purpose processor, a digital signal processor (DSP), an application specific integrated circuit (ASIC), a field programmable gate array (FPGA) or other programmable logic device, discrete gate or transistor logic, discrete hardware components, or any combination thereof designed to perform the functions described herein. A general purpose processor may be a microprocessor, but in the alternative, the processor may be any conventional processor, controller, microcontroller, or state machine. A processor may also be implemented as a combination of computing devices, e.g., a combination of a DSP and a microprocessor, a plurality of microprocessors, one or more microprocessors in conjunction with a DSP core, or any other such configuration.

The methods, sequences and/or algorithms described in connection with the aspects disclosed herein may be embodied directly in hardware, in a software module executed by a processor, or in a combination of the two. A software module may reside in RAM, flash memory, ROM, EPROM, EEPROM, registers, hard disk, a removable disk, a CD-ROM, or any other form of storage medium known in the art. An exemplary storage medium is coupled to the processor such that the processor can read information from, and write information to, the storage medium. In the alternative, the storage medium may be integral to the processor. The processor and the storage medium may reside in an ASIC. The ASIC may reside in a user terminal (e.g., UE). In the alternative, the processor and the storage medium may reside as discrete components in a user terminal.

In one or more exemplary aspects, the functions described may be implemented in hardware, software, firmware, or any combination thereof. If implemented in software, the functions may be stored on or transmitted over as one or more instructions or code on a computer-readable medium. Computer-readable media includes both computer storage media and communication media including any medium that facilitates transfer of a computer program from one place to another. A storage media may be any available media that can be accessed by a computer. By way of example, and not limitation, such computer-readable media can comprise RAM, ROM, EEPROM, CD-ROM or other optical disk storage, magnetic disk storage or other magnetic storage devices, or any other medium that can be used to carry or store desired program code in the form of instructions or data structures and that can be accessed by a computer. Also, any connection is properly termed a computer-readable medium. For example, if the software is transmitted from a website, server, or other remote source using a coaxial cable, fiber optic cable, twisted pair, digital subscriber line (DSL), or wireless technologies such as infrared, radio, and microwave, then the coaxial cable, fiber optic cable, twisted pair, DSL, or wireless technologies such as infrared, radio, and microwave are included in the definition of medium. Disk and disc, as used herein, includes compact disc (CD), laser disc, optical disc, digital versatile disc (DVD), floppy disk and blu-ray disc where disks usually reproduce data magnetically, while discs reproduce data optically with lasers. Combinations of the above should also be included within the scope of computer-readable media.

While the foregoing disclosure shows illustrative aspects of the disclosure, it should be noted that various changes and modifications could be made herein without departing from the scope of the disclosure as defined by the appended claims. The functions, steps and/or actions of the method claims in accordance with the aspects of the disclosure described herein need not be performed in any particular order. Furthermore, although elements of the disclosure may be described or claimed in the singular, the plural is contemplated unless limitation to the singular is explicitly stated.

What is claimed is:

1. A method for optimizing routing and wavelength assignment in a network, the method comprising:

determining, by a source node in the network, a routing assignment for the network, wherein the routing assignment is determined using a decongestion cost-based function;

determining, by the source node, a wavelength assignment for the network based on a vector difference, wherein the vector difference uses bit operations to describe wavelength usage across links in the network based on how the links are connected, the determination of the wavelength assignment comprising

spanning the network for a path,

calculating a weighted correlation function for at least one length in the network,

storing the weighted correlation,

determining if a next path exists,

if the next path is found, spanning for the next path in the network, and

if the next path is not found, returning the stored correlation, and wherein the cost-based function comprises assigning a connectivity weight to each cross connect within the source node, determining a runtime hop count during route computation, and calculating an incremental and cumulative cost based route on the connectivity weight and the hop count.

2. The method of claim **1**, further comprising determining at least one path for routing based on the cost-based function.

3. The method of claim **2**, wherein a set of shortest length paths comprises at least one shortest length path that is longer than a second shortest length path in the set of shortest length paths.

4. The method of claim **1**, further comprising:

calculating at least one vector difference in a spanning process for a wavelength vector in the network for a lightpath reservation based on wavelength continuity to avoid blocking due to node or network segmentation as part of lightpath reservations.

5. The method of claim **4**, further comprising:

determining a wavelength based in part on stored calculated vector differences.

6. The method of claim **1**, further comprising computing minimum spanning tree (MST) links for networks with more than 20 nodes.

7. The method of claim **1**, further comprising calculating wavelength vectors for links within two level proximity for a current working path.

8. The method of claim **1**, further comprising using integer linear programming.

9. The method of claim **1**, wherein the network comprises a heterogeneous bandwidth composition.

10. The method of claim **1**, further comprising assigning a weight with each new path found.

11. An apparatus, in a source node in a network, for optimizing routing and wavelength assignment in the network, comprising:

logic configured to determine a routing assignment for a network, wherein the routing assignment is determined using a decongestion cost-based function;

logic configured to determine a wavelength assignment for the network based on a vector difference, wherein the vector difference uses bit operations to describe wavelength usage across links in the network based on how the links are connected, the determination of the wavelength assignment comprising

logic configured to span the network for a path,

logic configured to calculate a weighted correlation function for at least one length in the network,

logic configured to store the weighted correlation,

logic for determining if a next path exists,

logic configured to span for the next path in the network if the next path is found, and

logic configured to return the stored correlation if the next path is not found, and

wherein the cost-based function is implemented through logic configured to assign a connectivity weight to each cross connect within the source node, logic configured to determine a runtime hop count during route computation, and logic configured to calculate an incremental and cumulative cost based route on the connectivity weight and the hop count.

12. The apparatus of claim **11**, further comprising:

logic configured to determine at least one path for routing based on the cost-based function.

13. The apparatus of claim **12**, wherein a set of shortest length paths comprises at least one shortest length path that is longer than a second shortest length path in the set of shortest length paths.

14. The apparatus of claim **11**, further comprising:

logic configured to calculate at least one vector difference for a second wavelength in the network for a lightpath reservation based on wavelength continuity to avoid blocking due to node or network segmentation as part of lightpath reservations.

15. The apparatus of claim **14**, further comprising:

logic configured to determine a path based on stored calculated vector differences.

16. The apparatus of claim **11**, further comprising logic configured to compute minimum spanning tree (MST) links for networks with more than 20 nodes.

17. The apparatus of claim **11**, further comprising logic configured to calculate wavelength vectors for wavelengths within two level proximity for a current working path.

18. The apparatus of claim **11**, further comprising logic configured to use integer linear programming.

19. The apparatus of claim **11**, wherein the network comprises a heterogeneous bandwidth composition.

20. The apparatus of claim **11**, further comprising logic configured to assign a weight with each new path found.

21. A network with an apparatus for optimizing routing and wavelength assignment in the network, comprising:

a plurality of nodes interconnected to one another through a plurality of wavelengths; and

a processor at a source node of the plurality of nodes configured to

determine a routing assignment for a network, wherein the routing assignment is determined using a decongestion cost-based function,

determine a wavelength assignment for the network based on a vector difference, wherein the vector difference uses bit operations to describe wavelength usage across links in the network based on how the links are connected, and wherein for the determination of the wavelength assignment, the processor is configured to

span the network for a path,

calculate a weighted correlation function for at least one length in the network,

store the weighted correlation,

determine if a next path exists,

span for the next path in the network if the next path is found, and

return the stored correlation if the next path is not found, and

wherein, for the cost-based function, the processor is further configured to assign a connectivity weight to each cross connect within the source node, determine a runtime hop count during route computation, and calculate an incremental and cumulative cost based route on the connectivity weight and the hop count.

22. The network of claim **21**, wherein the processor is further configured to

determine at least one path for routing based on the cost-based function.

23. The network of claim **22**, wherein a set of shortest length paths comprises at least one shortest length path that is longer than a second shortest length path in the set of shortest length paths.

24. The network of claim **21**, wherein the processor is further configured to

calculate at least one vector difference for a second wavelength in the network for a lightpath reservation based on wavelength continuity to avoid blocking due to node or network segmentation as part of lightpath reservations.

25. The network of claim **24**, wherein the processor is further configured to

determine a path based on stored calculated vector differences.

26. The apparatus of claim **21**, wherein the processor is further configured to calculate wavelength vectors for wavelengths within two level proximity for a current working path.

27. The apparatus of claim **21**, wherein the processor is further configured to assign a weight with each new path found.

28. The apparatus of claim **21**, wherein the processor is further configured to assign a weight with each new path found.

29. Software for optimizing routing and wavelength assignment in a network stored in a non-transitory computer-readable medium, comprising:

at least one instruction executed by one or more processors at a source node in a network to determine a routing assignment for the network, wherein the routing assignment is determined using a decongestion cost-based function;

at least one instruction executed by the one or more processors at the source node to determine a wavelength assignment for the network based on a vector difference, wherein the vector difference uses bit operations to describe wavelength usage across links in the network based on how the links are connected, the determination of the wavelength assignment comprising

at least one instruction executed by the one or more processors to span the network for a path,

at least one instruction executed by the one or more processors to calculate a weighted correlation function for at least one length in the network,

at least one instruction executed by the one or more processors to store the weighted correlation,

at least one instruction executed by the one or more processors to determine if a next path exists,

at least one instruction executed by the one or more processors to span for the next path in the network if the next path is found, and

at least one instruction executed by the one or more processors to return the stored correlation if the next path is not found, and

wherein the cost-based function is implemented through at least one instruction executed by the one or more processors to assign a connectivity weight to each cross connect within the source node, at least one instruction executed by the one or more processors to determine a runtime hop count during route computation, and at least one instruction executed by the one or more processors to calculate an incremental and cumulative cost based route on the connectivity weight and the hop count.

* * * * *